ITEM NO.	PART NUMBER	DESCRIPTION
1	XVP00001	FEET VACUUM MACHINE
2	XVP00005	POWER SWITCH DPDT 120V 1.5A
3	XVP00006	SEAL CONTACTOR RATED 120V
4	XVP00007	PUMP CONTACTOR RATED 120V
5	XVP00009	CIRCUIT BREAKER 125V 20A
6	XVP00010	CONTROL TRANSFORMER 64.5VA
7	XVP00013	SEAL TRANSFORMER 15V 700VA
8	XVP00015	SENSOR LIQUID CONTROL
9	XVP00016	CONTROL BOARD VP16
10	XVP00017	CABLE LIQUID SENSOR CONTROL
11	XVP00018	FUSE CONTROL BOARD VP16
12	XVP00019	FUSE CONTROL BOARD VP16
13	XVP00020	FUSE CONTROL TRANSFORMER
14	XVP00021	FUSE CONTROL TRANSFORMER
15	XVP00022	FUSE SEAL TRANSFORMER
16	XVP00024	SOFT-AIR VALVE
17	XVP00026	VALVE BLOCK VP 16 - VPP16
18	XVP00028	SEAL CYLINDER VP 16 - VPP16
19	XVP00029	SEAL BAR VP 16 - VPP16
20	XVP00032	HINGE VP16 - VPP16
21	XVP00033	LID CLOSING BRACKET
22	XVP00036	VACUUM PUMP 21 M3
23	XVP00037	OIL SIGHT GLASS 21 M3 PUMP
24	XVP00039	OIL REFILL BOTTLE
25	XVP00040	VACUUM METER
26	XVP00041	LID GAS SPRING
27	XVP00043	FRONT PANEL VP 16 COMPLETE
28	XVP00044	SWITCH COVER INTERLOCK
29	XVP00048	EXHAUST FILTER 21 M3 PUMP
30	XVP00052	TEFLON TAPE 3 METER LENGTH
31	XVP00057	LEG EXTENSION
32	XVP00058	PLASTIC FOOT
33	XVP00061	POWER CORD SJTOW 12 AWG
34	XVP00062	BAG HOLDER SUPPORT
35	XVP00066	PLASTIC LID
36	XVP00068	LID GASKET 71 INCHES
37	XVP00071	FRONT BAG GRIPPER KIT
38	XVP00072	REAR BAG GRIPPER KIT
39	XVP00073	CONTROL PANEL MOUNTING CLIP KIT
40	XVP00076	OIL PLUG, VACUUM PUMP

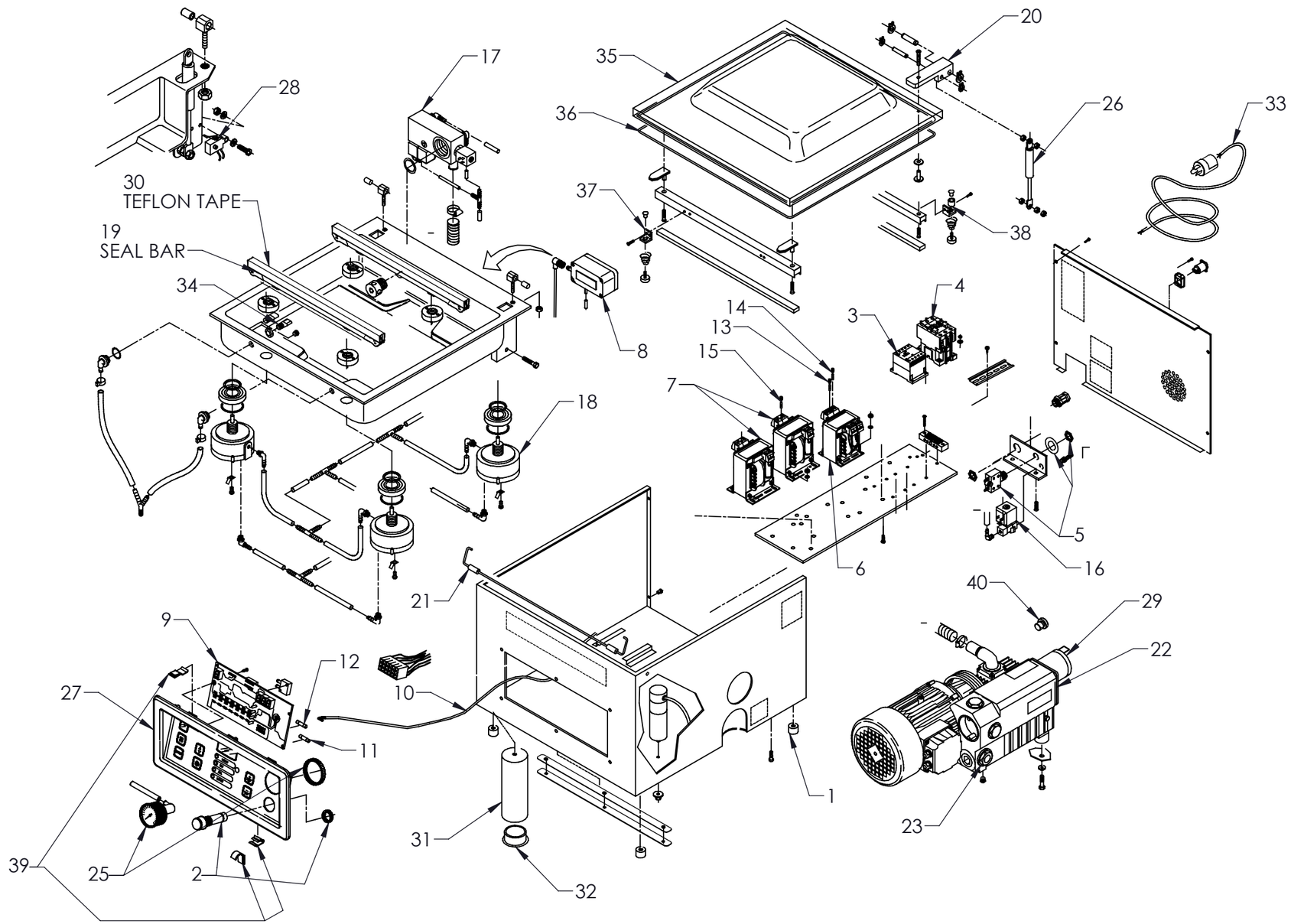

ACCESSORIES:
XVP00039 - OIL REFILL
XVP00050 - SERVICE KIT
INCLUDES - OIL REFILL, LID,
GASKET, HOLD DOWN SILICONE
STRIP, SEALING WIRE, TEFLON TAPE

XVP00051 - SEAL WIRE 3.5MM, 3M LENGTH
XVP00055 - INSERT PLATE
XVP00056 - INCLINED PLATE INSERT

© 2019 Document No. 40833 Rev. C